SIEMENS

Operating Instructions

C.T. Operated Bimetal Relay with single phasing protection feature

Type 3UA66/68/ 3UC5/6

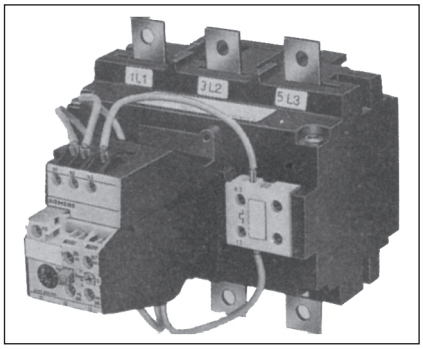

The Siemens 3UA66/68 and 3UC5/6 C.T. operated bi-relays provide accurate overload and accelerated single phasing protection for three phase motors having rated currents upto 630A/400A respectively.

3UA66/68 comprise of current transformer, a bimetallic tripping unit, while 3UC 5/6 comprise of current transformer, a bimetallic tripping unit and resistance unit. The tripping unit makes use of the dual slider principal for faster tripping under single phasing.

Technical Data

Rated insulation voltage 1000V AC for main circuit

Ambient temperature compensation :
: -25° C to + 55° C

Rated operating current :
Ranges upto : 630A for 3UA66/68
: 400A for 3UC5/6

Frequency of operation :
: 15 operations/hour.

A. Selection (Setting Ranges)

The Bi-relay 3UA66/68 is available in 5 different ranges while type 3UC5/6 is available in 13 different ranges. The minimum and maximum setting of each range is listed in table 1.

B. Short Circuit Protection

The Bi-relay have to be protected from short circuits. It is mandatory to use back up HRC fuses. The maximum permissible ratings of Siemens fuses (Type 3NA) corresponding to type '2' co-ordination for each relay range are listed in table 1 and 2. Maximum back-up fuse rating for auxiliary circuit : 4 Amps.

C. Operating Instructions/ Setting

Set scale so that ratio corresponds to the rated load current.

Example : Load current : 200 A
Max. setting : 250 A
ratio : 200 = 0.8
250

i.e. Scale should be set at 0.8 marking. Refer table 1 & 2 for more details.

D. Installation

Bi-relays type 3UA 66/68 and 3UC 5/6 are independent mounting type. Permitted mounting position is an shown in figure 1. Care should be taken to avoid shocks and prolonged vibrations.
Bi-relays are suitable for snap-on mounting on a DIN rail (75 mm DIN EN 50023) or bolting on a plane surface by four M6 bolts to be secured by washer and spring washer. For details refer dimension drawing

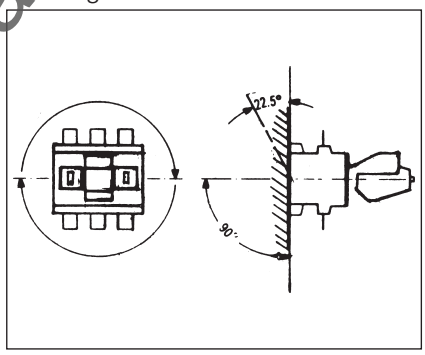

Fig. 1

E. Connection diagram

Refer figure 2 and 3

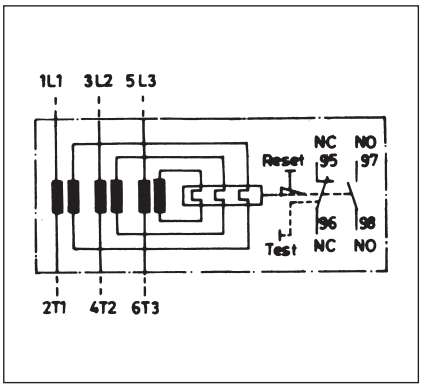

Fig. 2

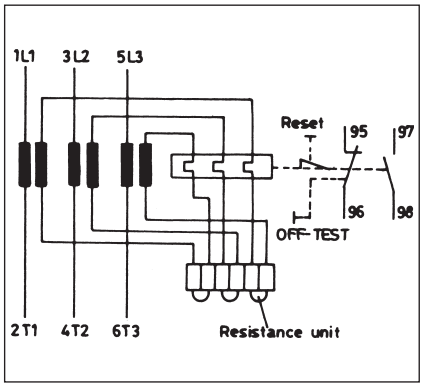

Fig. 3

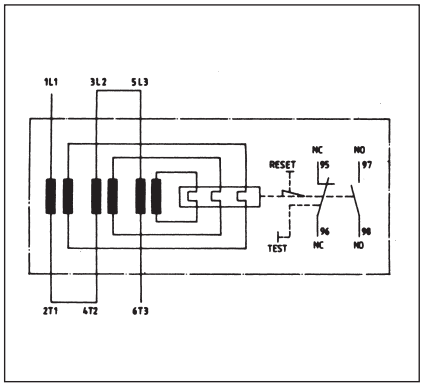

Fig. 4

in case of single phase loads the three main poles should be connected in series. Refer figure 4.

F. Auxiliary contacts

See figure 2 and 3 contact configuration is 1NO + 1NC. 1NC is trip contact. For switching capacities refer table.

AC11		DC11	
Ue V	Ie A	Ue V	Ie A
24	2	24	1
60	1,5	60	0,4
125	1,25	110	0,22
220	1,15	220	0,1
380	1,1		
415	1		
500	1		

G. Allowable conductor cross sections

Main Circuits (Refer table 3)

Auxiliary Circuit

Solid/ Stranded	2 x (1 to 2.5 mm²)
Flexible with end Sleeve	2 x (0.75 to 1.5 mm²)
Terminal screw	M 3.5
Toghtening torque	0.8 - 1.2 Nm

H. Connection of Main conductors (Refer fig. 5) (Not applicable for 3UC50)

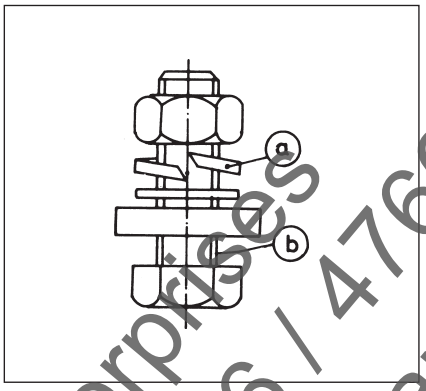

Fig. 5

The spring washer (a) is required to lock the screw. The serrated washer (b) facilitates fitting and prevents screw from turning. There is thus no need to hold the screw head. The serrated washer does nor reduce the locking effect of the spring washer (Refer figure 8. These are supplied loose in a plastic beg)

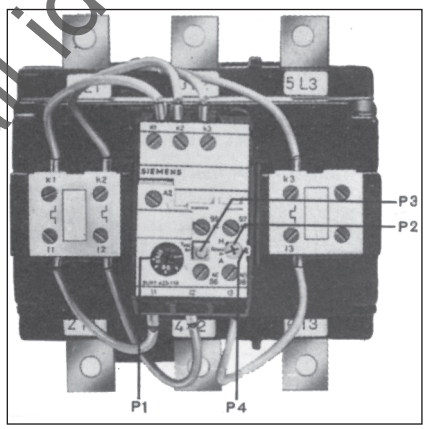

Fig. 6

I. Operational details (Refer fig. 6)

1) Dial Setting (PI)

Set the scale on tripping relay at making corresponding to the load current as indicated in table 1.

2) Reset Button (P2)

Before putting the relay into operation, press the blue coloured reset button (P2). The auxiliary contacts are present in the factory for 'Manual resetting'. This can be converted to 'Automatic Resetting' by pressing the reset button (P2) with screwdriver and turning it anti-clockwise from H (Manual) to A (Automatic) upto limit.

3) Test (Off) button (P3)

The trip contact (NC) can be manually opened by pressing the red coloured test (Off) button - P3.

4) Trip indicator (P4)

Tripping of 'Manual-resetting' relay is indicated by popping-up of the green coloured pin (P4) from the front plate. Press the reset button to reset the relay. There is no indication in case of automatic resetting.

J) Tripping Characterisrics

The average tripping characteristics for 3 phase overload and single phasing i.e. 2 phase overloads is given in data sheet. Individual characteristics for each range are available on request. Please get in touch with the nearest Siemens office.

Type	Min. setting (Amp.)	Max setting (Amp.)	Fuse. rating (Amp.)	Load current corresponding to marking				
				0,625 (Amp.)	0.7 (Amp.)	0.8 (Amp.)	0.9 (Amp.)	1 Amp.)
3UA66	160	250	355	156	175	200	225	250
	200	320	400	200	224	256	288	320
	250	400	500	250	280	320	360	400
3UA68	320	500	630	312	350	400	450	500
	400	630	800	394	441	504	567	630

Table 1

Type	Min. setting (Amp.)	Max. setting (Amp.)	Fuse rating (Amp.)	Load current corresponding to marking				
				0,625 (Amp.)	0.7 (Amp.)	0.8 (Amp.)	0.9 (Amp.)	1 (Amp.)
3UC50	2.5	4.0	16	2.5	2.8	3.2	3.6	4.0
	4.0	6.3	25	3.94	4.41	5.04	5.67	6.3
	6.3	10.0	25	6.25	7.0	8.0	9.0	10.0
	8.0	12.5	32	7.81	8.75	10	11.25	12.5
3UC58	10	16	32	10.0	11.2	12.8	14.4	16
	16	25	63	15.6	17.5	20.0	22.5	25
	25	40	100	25.0	28.0	32.0	36.0	40
	40	63	125	39.4	44.1	50.4	56.7	63
3UC62	63	100	250	62.5	70	80	90	100
	100	160	315	100	112	128	144	160
3UC66	125	200	500	125	140	160	180	200
	160	250	630	156	175	200	225	250
	250	400	630	250	280	320	360	400

Table 2

	Relay type					
	3UC50	3UC58	3UC62	3UA66/68/3UC66		
				200A	400A	630A
Terminal screw	M4	M6	M8	M8	M10	M10
Tightening torque (NM)	1 - 1.5	3. - 4	10 - 14	10 - 14	14 - 24	14 - 24
Solid/Stranded Conductor (mm^2)	1 to 4	-	-	-	-	-
Flexible conductor (mm^2)	1 to 2.5	-	-	-	-	-
Round conductor with cable lug (mm^2)	-	35	120	185	240	2 x 240
Flat bar (mm)	-	15.x 3	20.x 5	20 x 3	2x30x5	2x30x5

Table 3- Allowable conductor cross section

Dimension in mm

3UA66/68

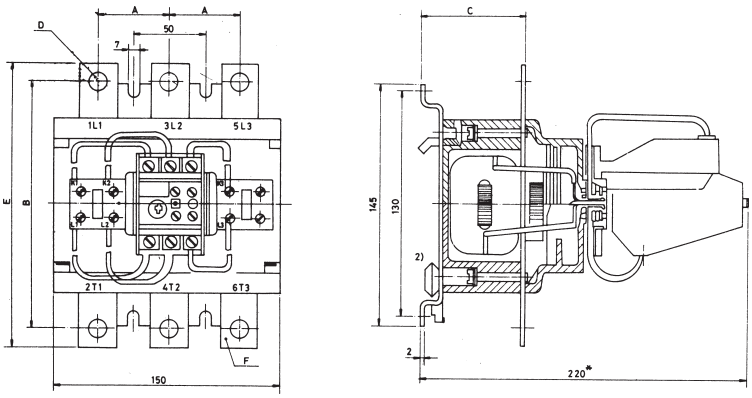

Relay type	A	B	C	D	E	F
3UA 630 - 3B (Up to 200 A)	46	140	69	9	160	20x3
3UA 66 30 - 3C, 3D, 3E (440A)	50	146	70	11	171	25x4
3UA 68 30 - 3F, 3G (630 A)	52	156	71	11	186	30x5

* Dimension for test button (stroke 3 mm)
Dimension for round reset button (stroke 2-5 mm) less 2.5mm
2) For 75mm DIN RAIL mounting as per DIN EN 50023

3UC50/30

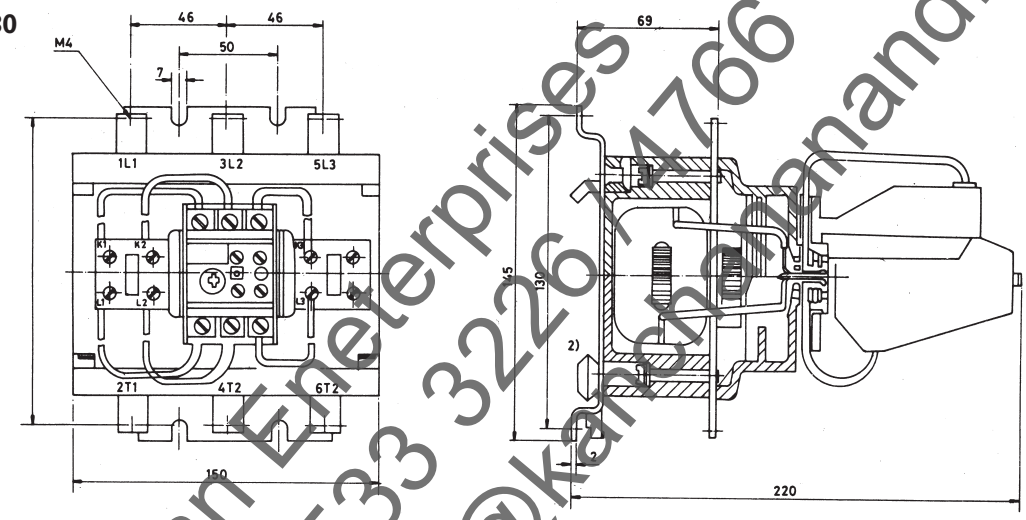

* Dimension for test button (stroke 3mm)
Dimension for round reset button (stroke 2.5 mm) less 2-5mm
2) For 75 mm DIN RAIL mounting as per DIN EN 50023.

3UC58 30/3UC62 30/3UC66 30

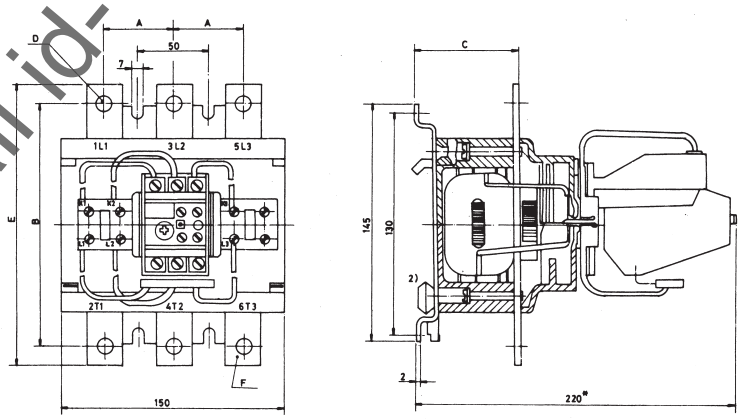

Relay type	A	B	C	D	E	F
3UC 5830	46	135	69	6.6	150	15x3
3UC 6230	46	140	69	9	160	20x3
3UC 66 30 - 3B, (200A)	50	146	69	9	160	20x3
3UC 66 30-3C-3E (400A)	50	146	70	11	171	25x4

* Dimension for test button (stroke 3 mm)
Dimension for round reset button (stroke 2.5 mm) less 2.5mm
2) For 75mm DIN RAIL mounting as per DIN EN 50023